TILT; the pendant

A sharp cone rests gently on a wooden sphere, suspended from a slender rod. Gravity becomes part of the composition, bringing the form into a delicate tilt ; a quiet moment of balance held in tension.

Brushed on the outside and mirror-polished within, the cone gathers and reflects light with a soft intensity. The pendant shifts easily to any angle, changing the direction of light and the character of the piece and the space

kaarbhaar

Tilt

a pendant.

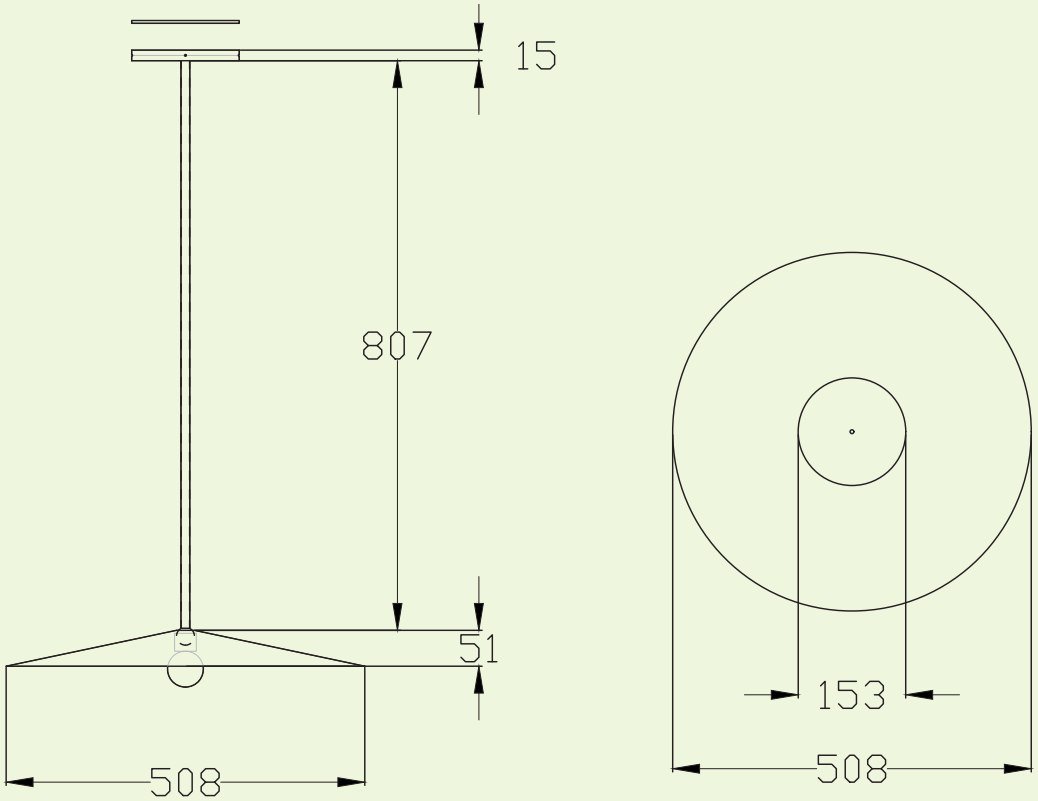

TILT ; the pendant assembled

DIMENSIONS	- 534mm x 534mm x 914.4mm
COMPONENTS	- Lamp shade x 1 Lamp body x 1 Wooden ball x 1
WEIGHT	- 5 kgs
MATERIALS	- Stainless steel, Wood
LAMPING SPECS	- B-22 CE bulbholder B-22, 9W-5700K-warm white CE Certified, Dimmable
LEAD TIME	- 2 Weeks

*All measurements are in mm

note

All our products are hand crafted and may carry inconsistencies, it's the marks of the maker that narrate the story of the countless hours spent into developing these beautiful pieces.

aboutkaarbhaar@gmail.com